DRL

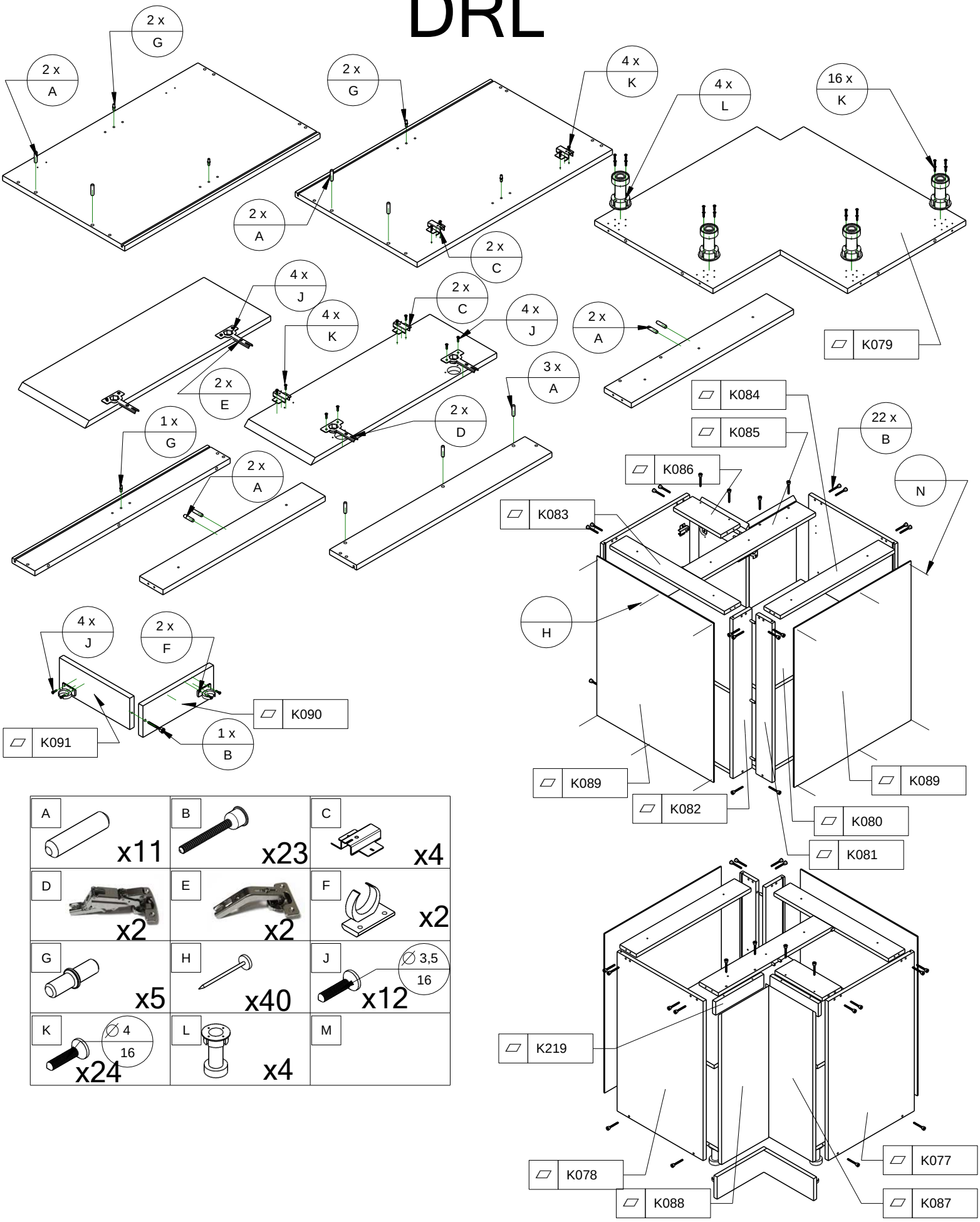

A x11	B x23	C x4
D x2	E x2	F x2
G x5	H x40	J ∅ 3,5 / 16 x12
K ∅ 4 / 16 x24	L x4	M