Theoretic Mass(kg)		Revision	
Surface Area(dm2)		A4	

Thread	Hole	Shaft

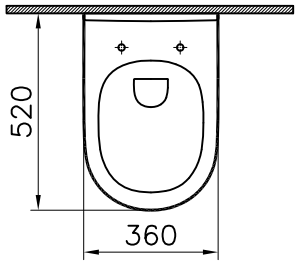

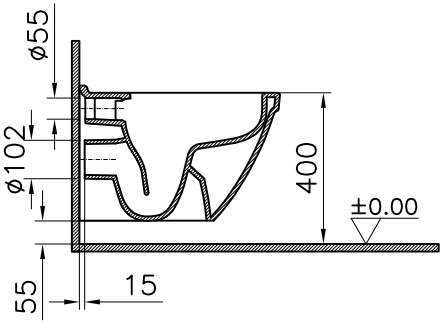

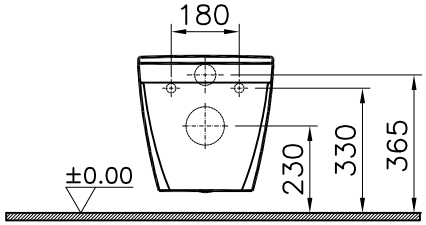

item	Quantity	Part Name	Drawing No	Material	Material Class
1	1	Wall-hung WC pan	7740-0075	Ceramic	

This drawing can only be used for the intended purposes. Unauthorized copying is strictly prohibited.

Series	Material	Ceramic	Material Class
	Wall-hung WC pan		

Drawn By	Controlled By	Approved By	Date	Drawing No	Scale
G.GULTER	H.TURKOZ	S.VEAT SARIGOL	10.11.2014	7740	1/20

VitrA® | ARTEMA®

R.S	Description	Date	NAME