Uponor Siccus 16

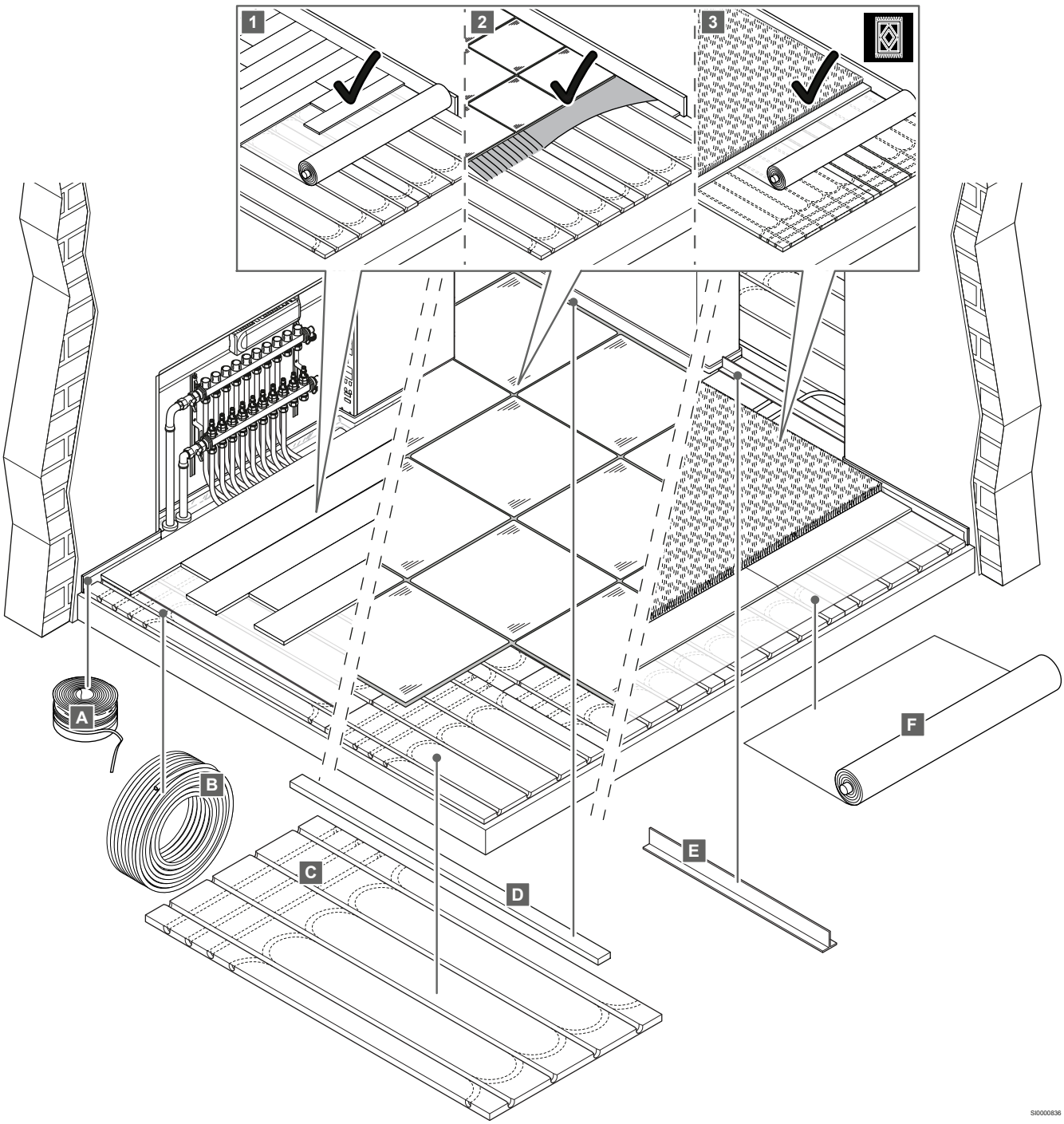

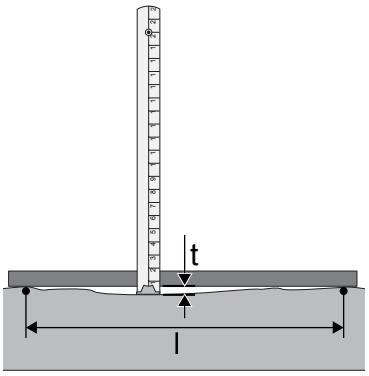

DIN EN 18202

l (m)	0,1	1	4	10	15
t (mm)	1	3	9	12	15

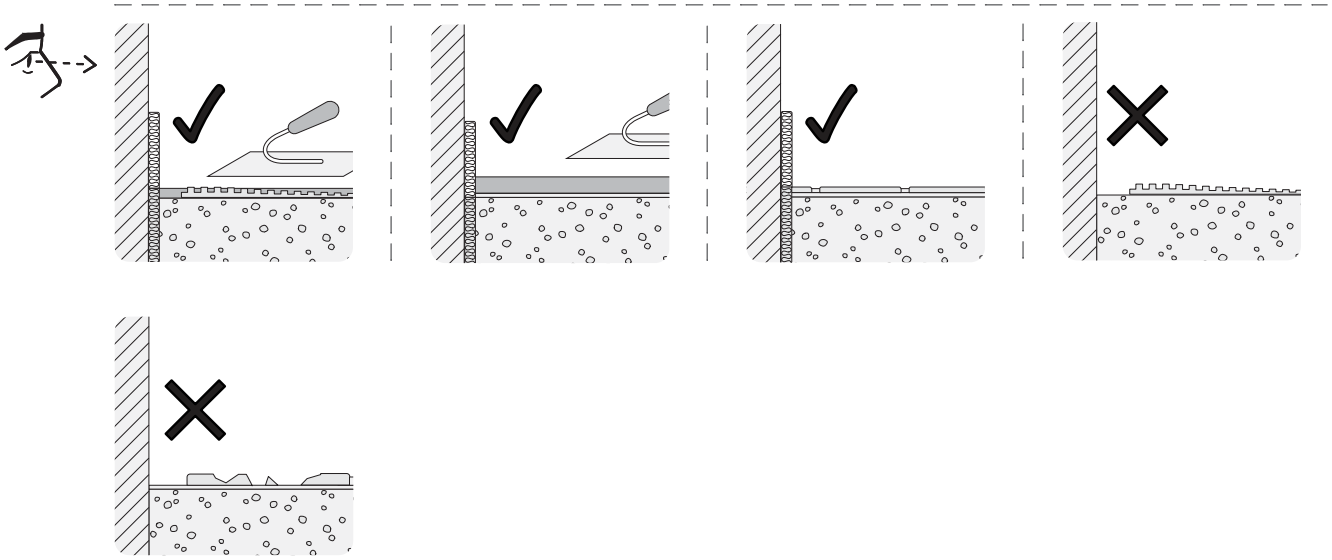

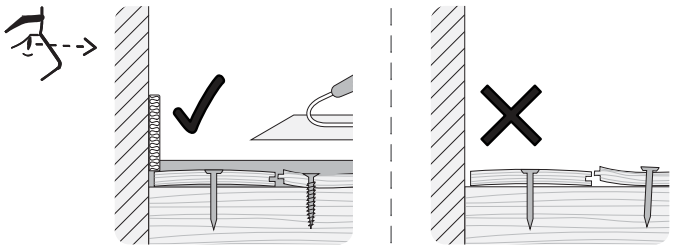

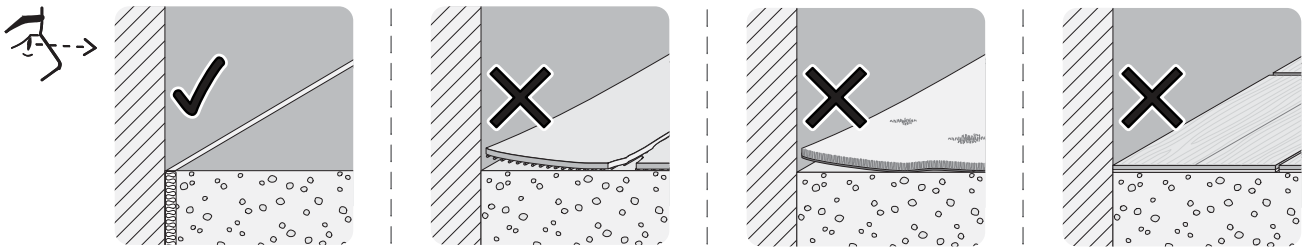

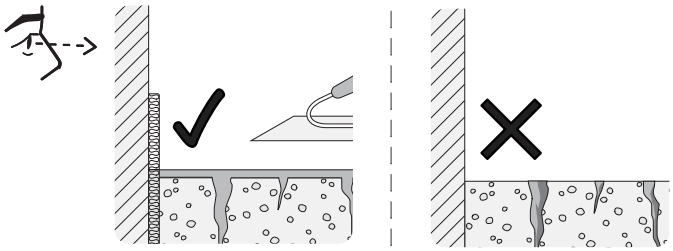

SI0000863

1

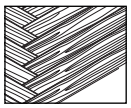

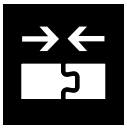

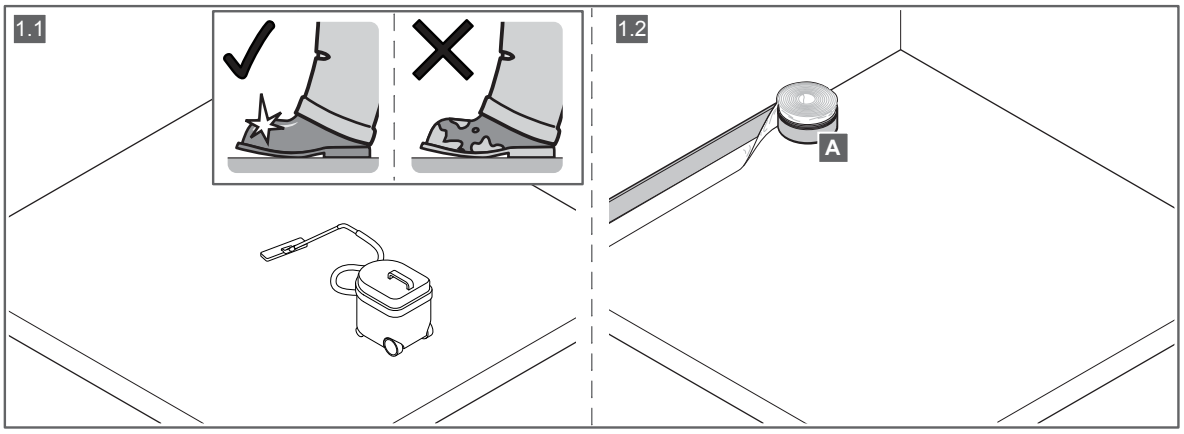

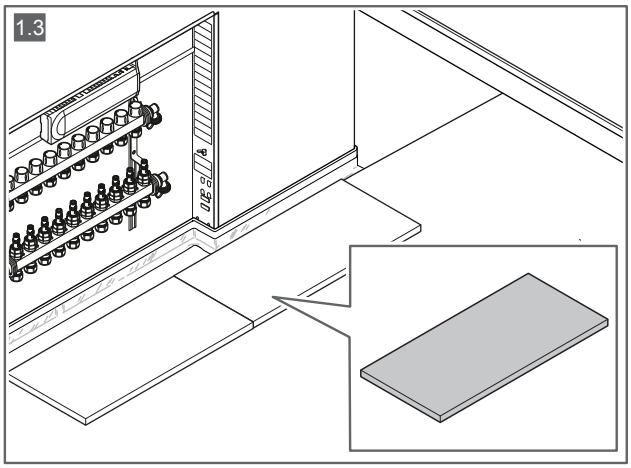

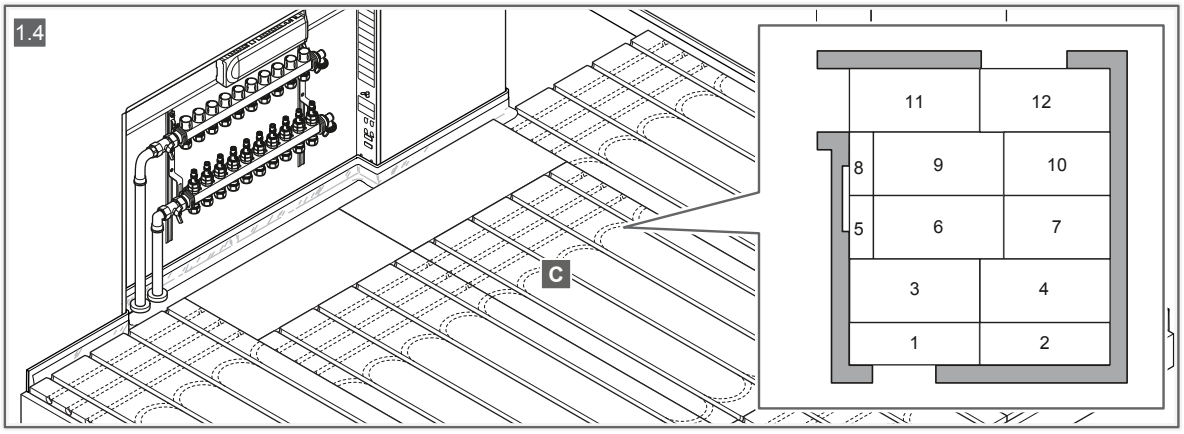

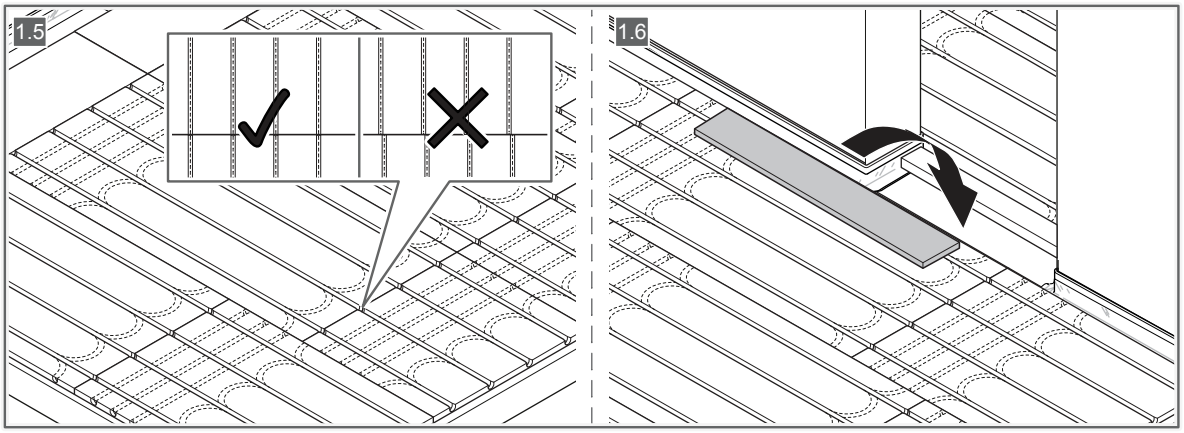

SI0000837

1

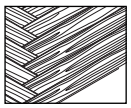

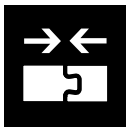

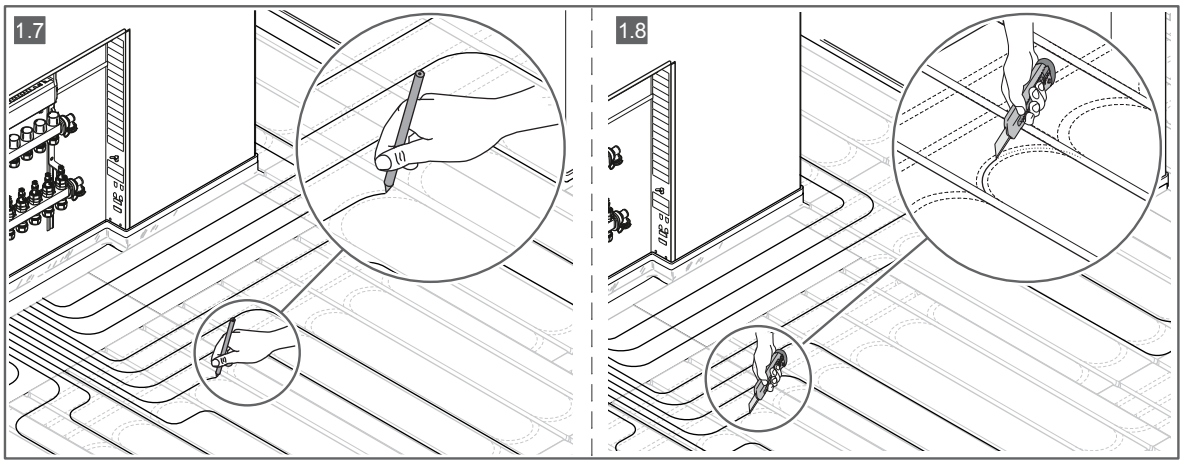

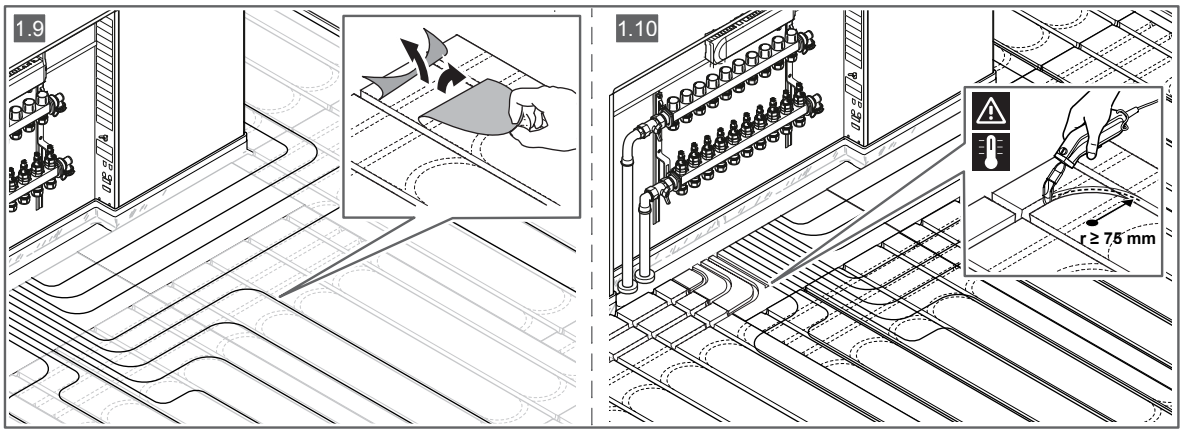

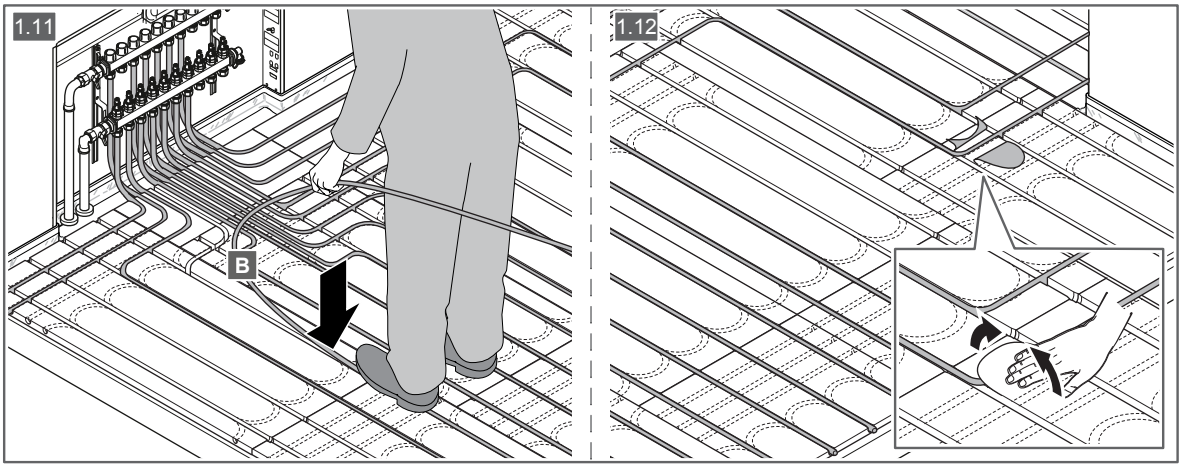

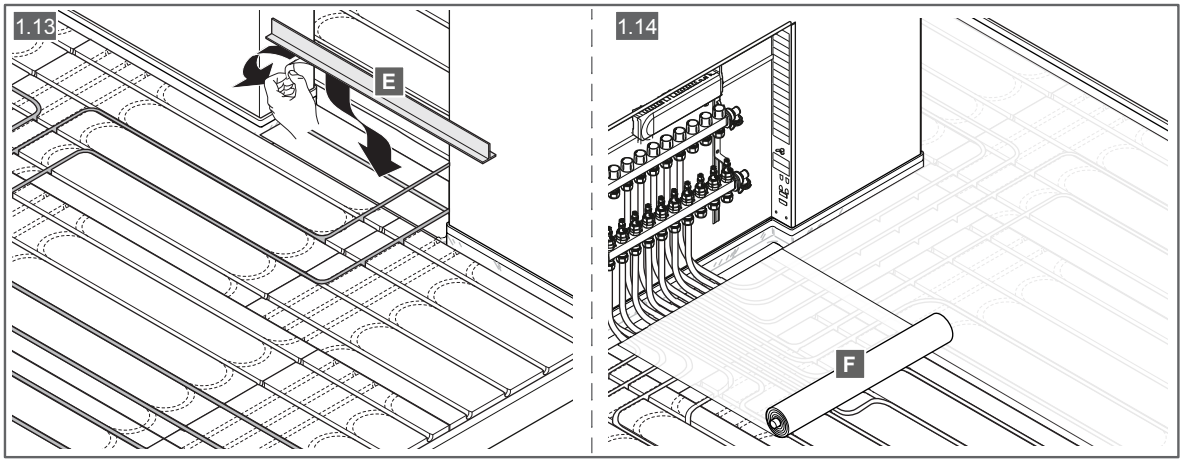

SI0000838

1

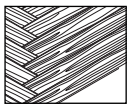

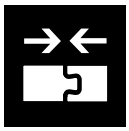

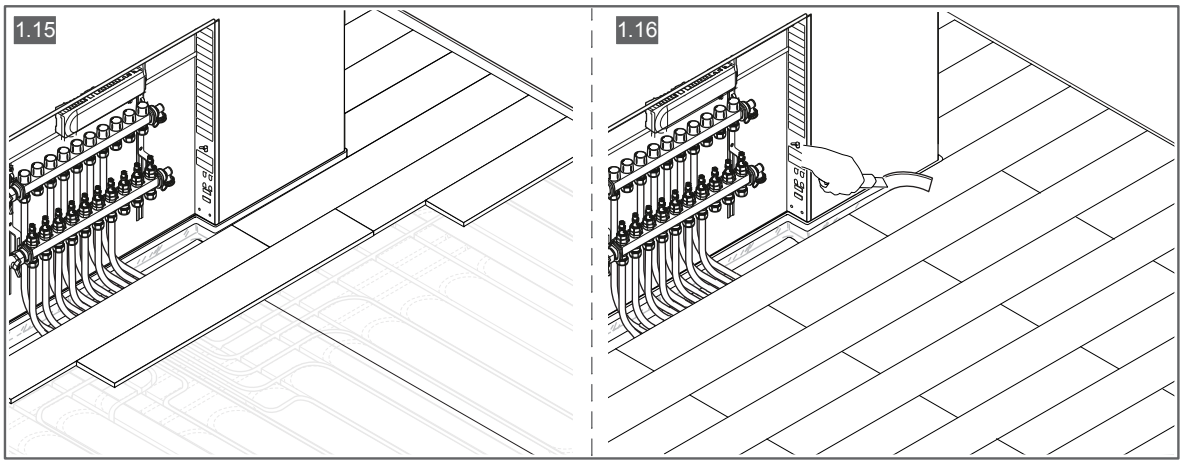

2

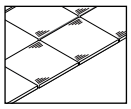

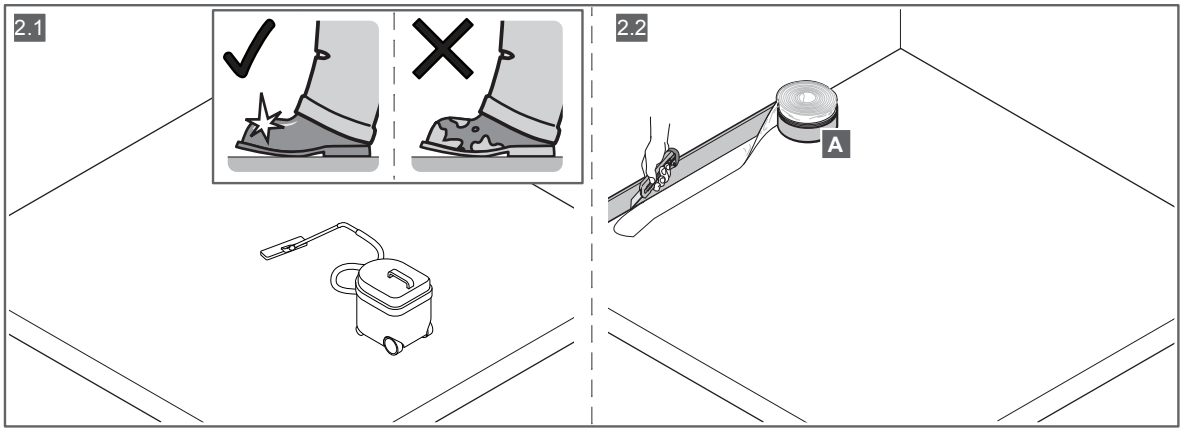

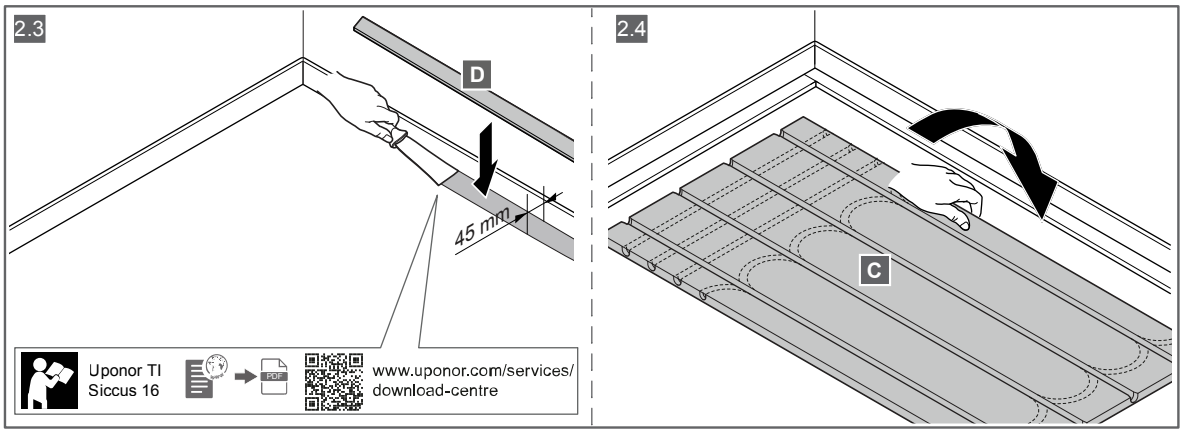

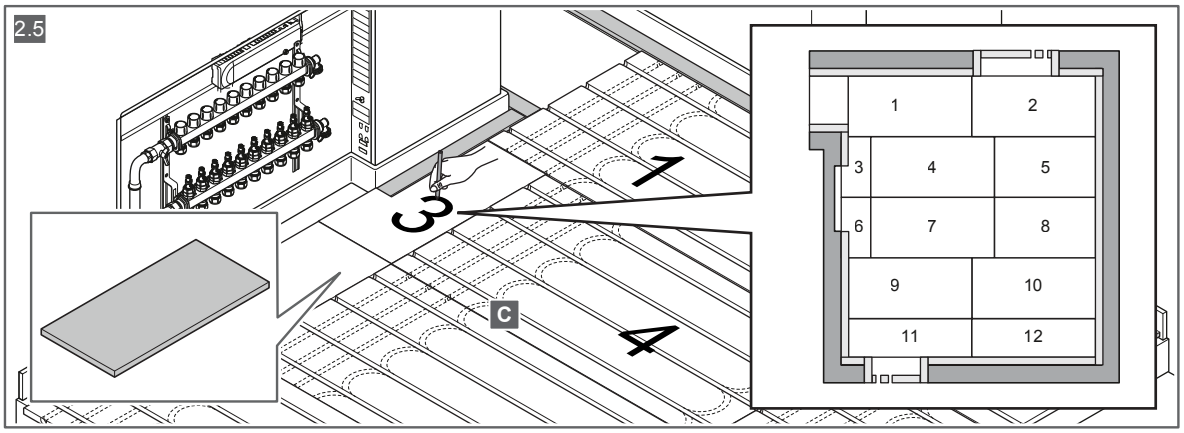

SI0000839

2

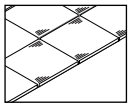

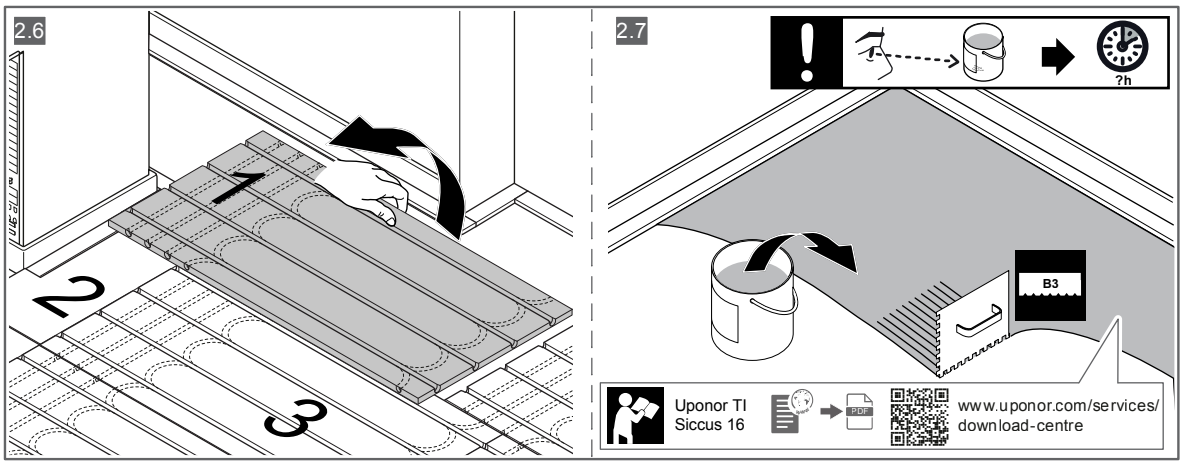
2.6
1
2
3
2.7
?h
B3
Uponor TI
Siccus 16
PDF
www.uponor.com/services/
download-centre

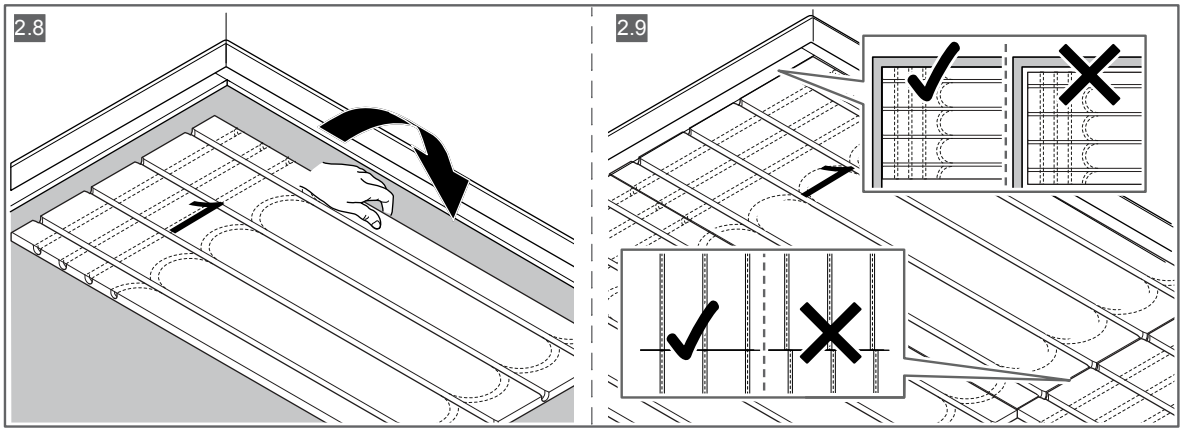
2.8
1
2.9
1

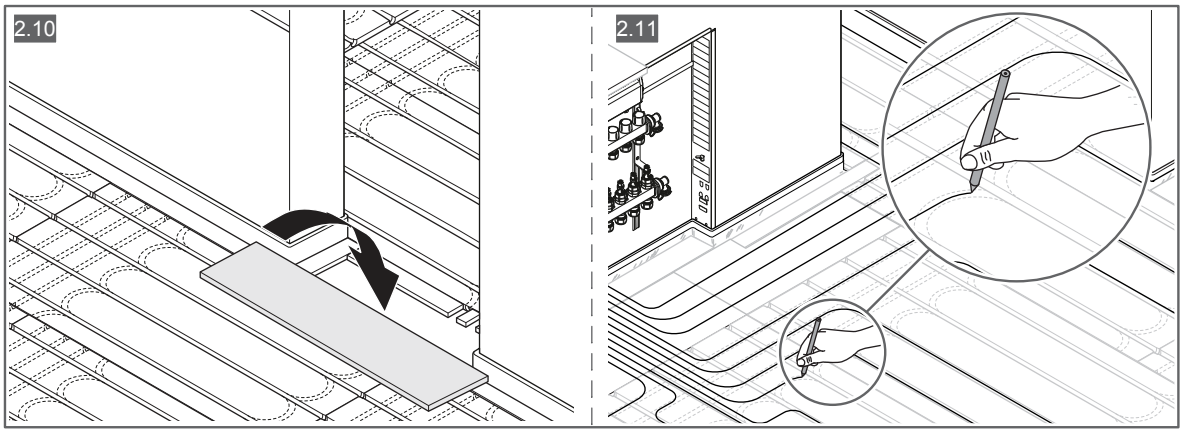
2.10
2.11

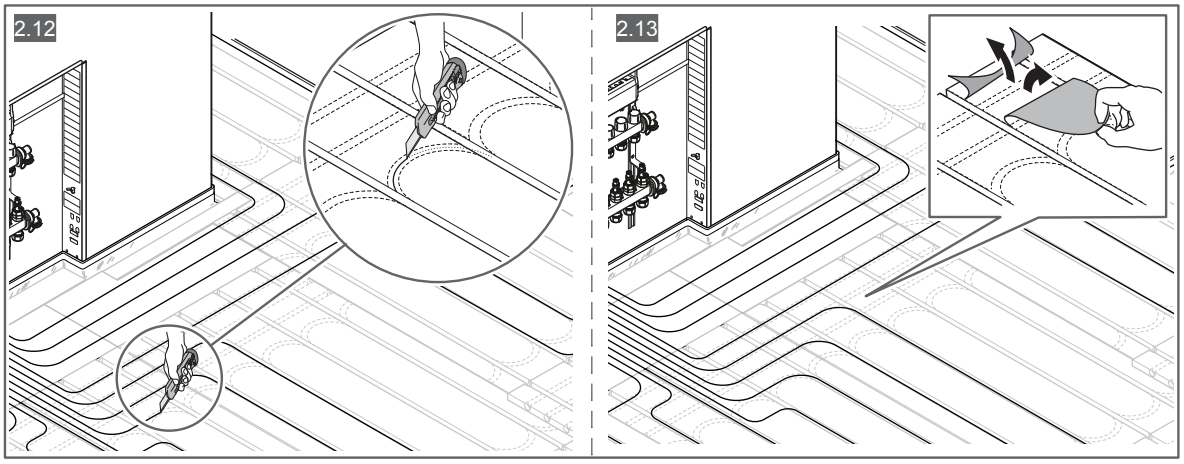
2.12
2.13

SI0000841

2

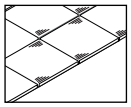

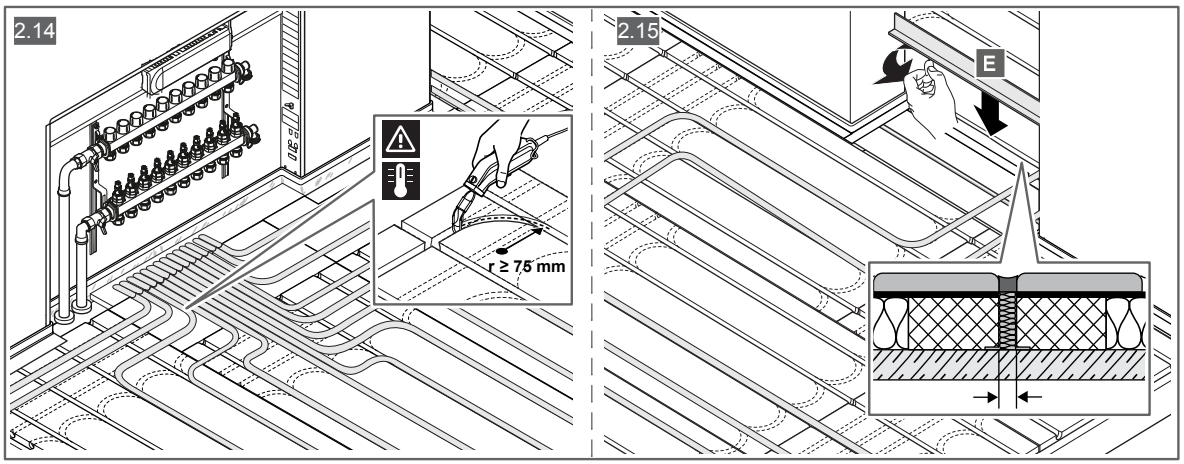
2.14
r ≥ 75 mm
2.15
E

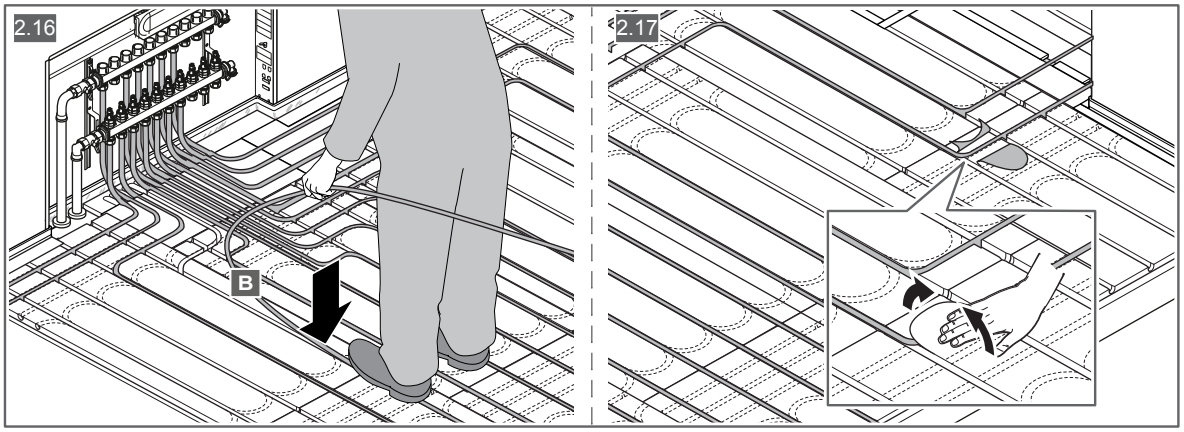
2.16
B
2.17

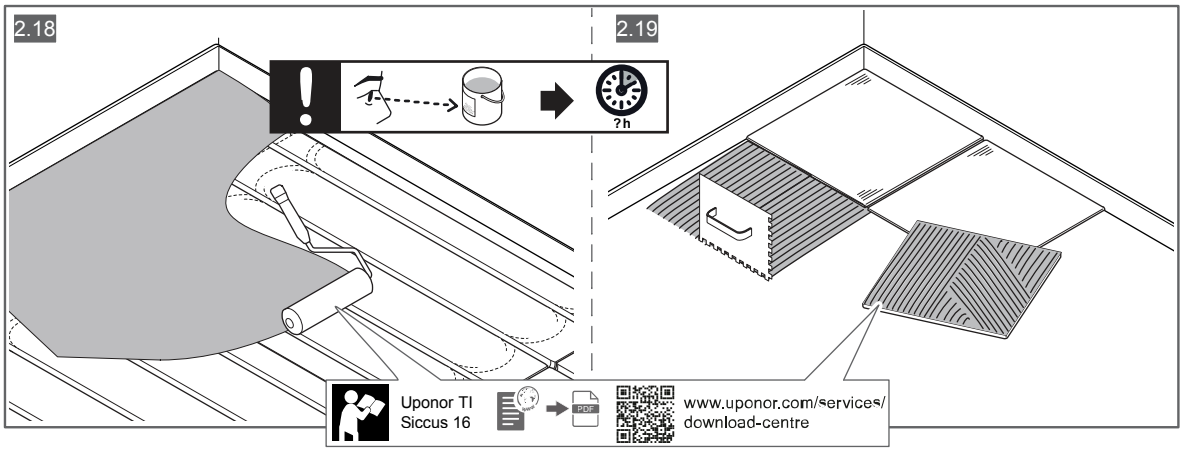
2.18
?h
2.19
Uponor TI
Siccus 16
PDF
www.uponor.com/services/
download-centre

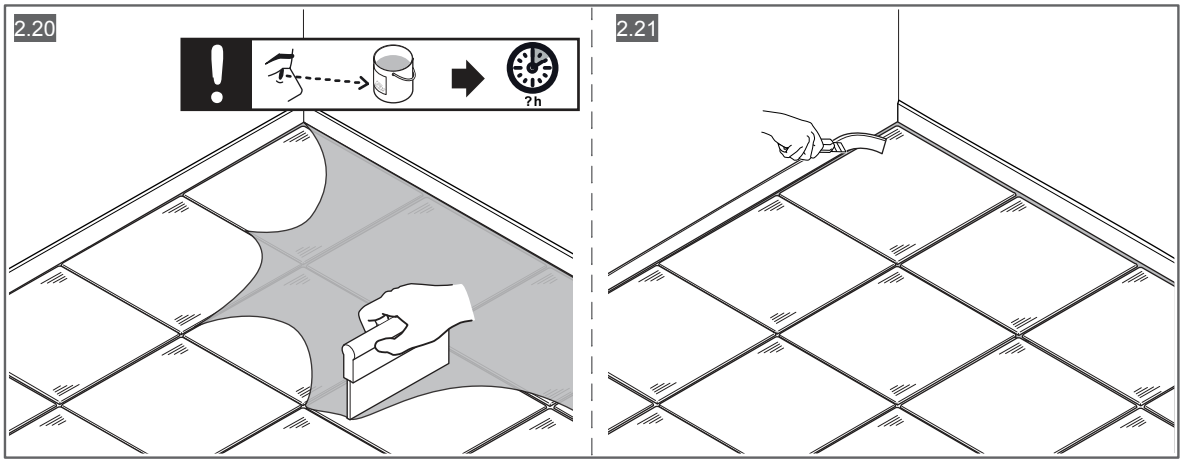
2.20
?h
2.21

SI0000842

3

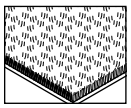

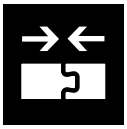

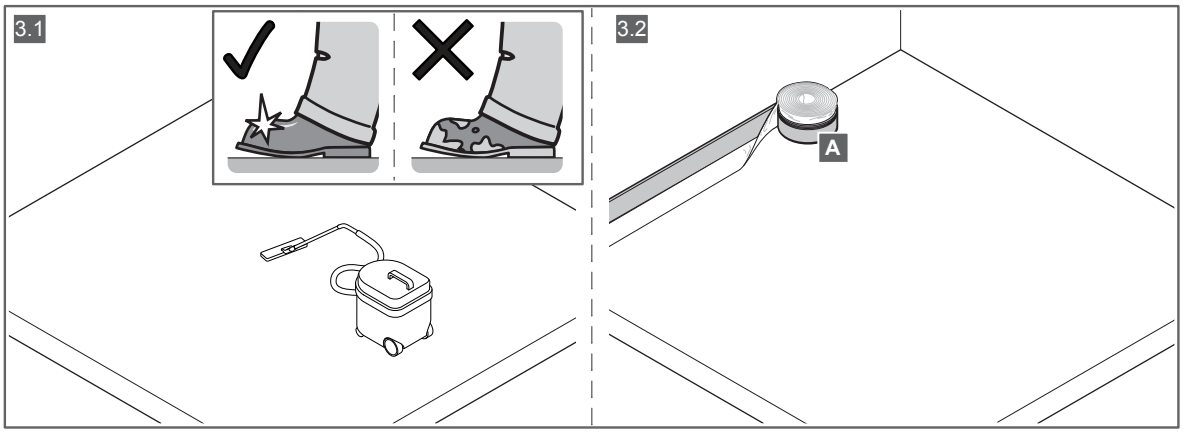

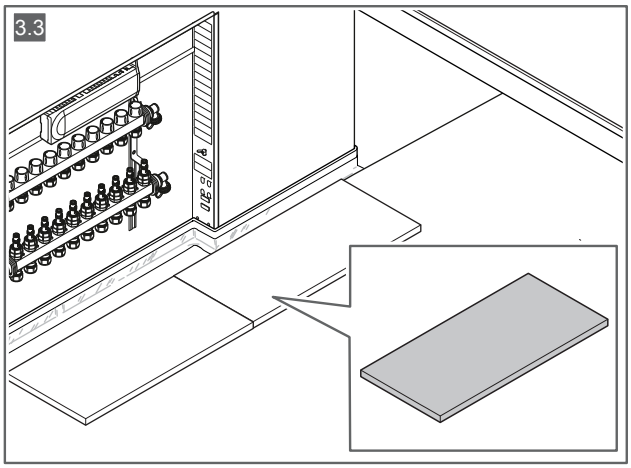

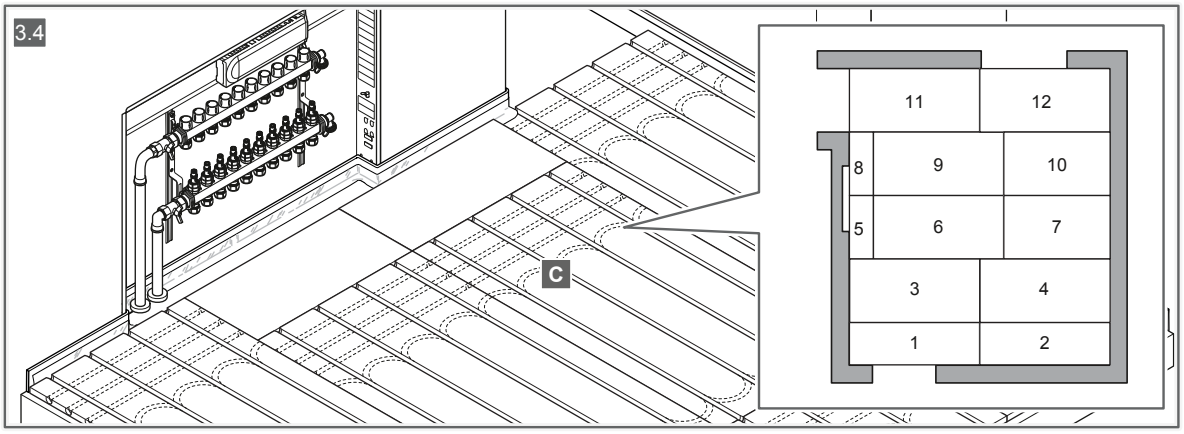

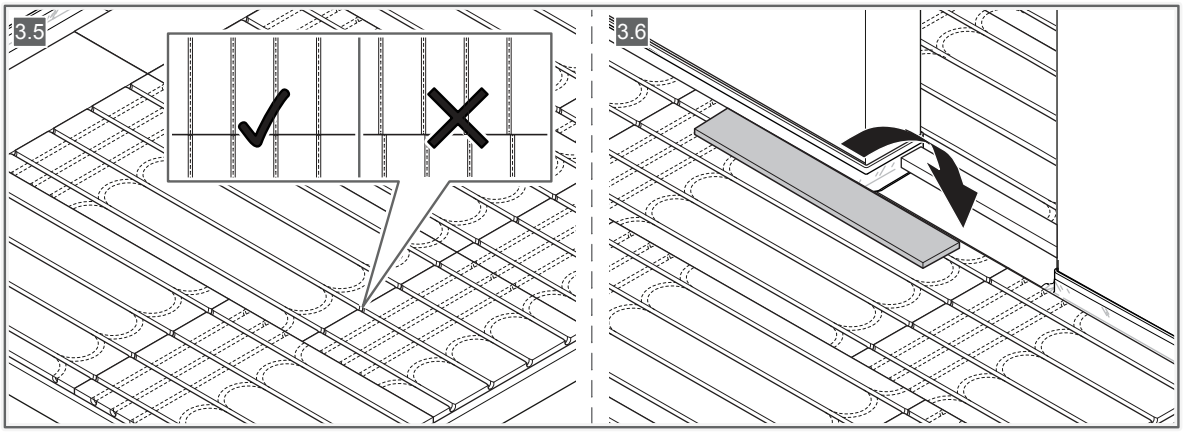

SI0000843

3

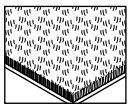

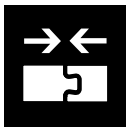

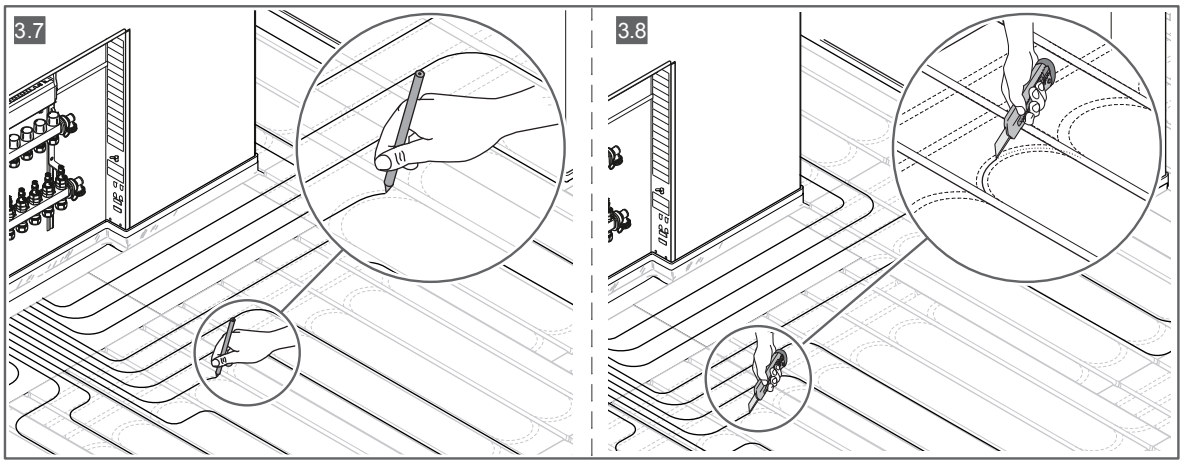

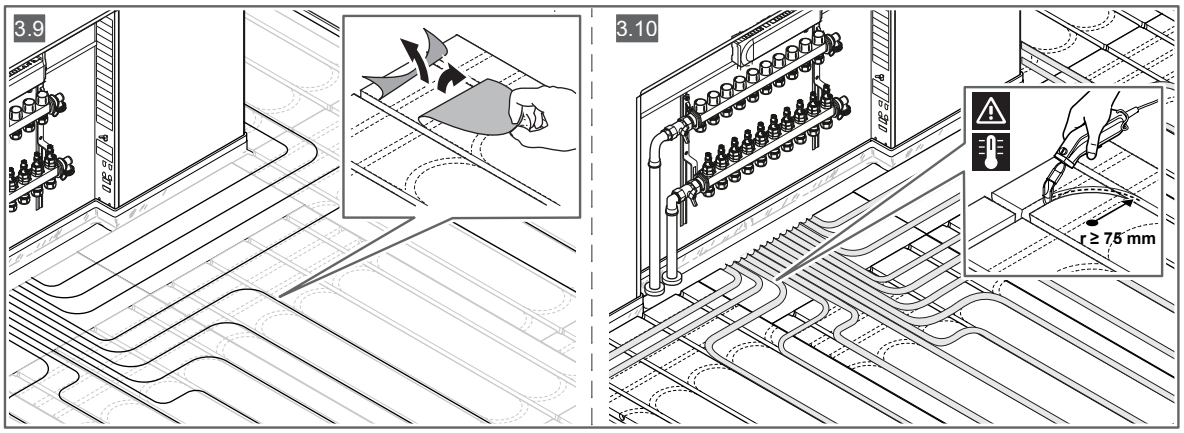

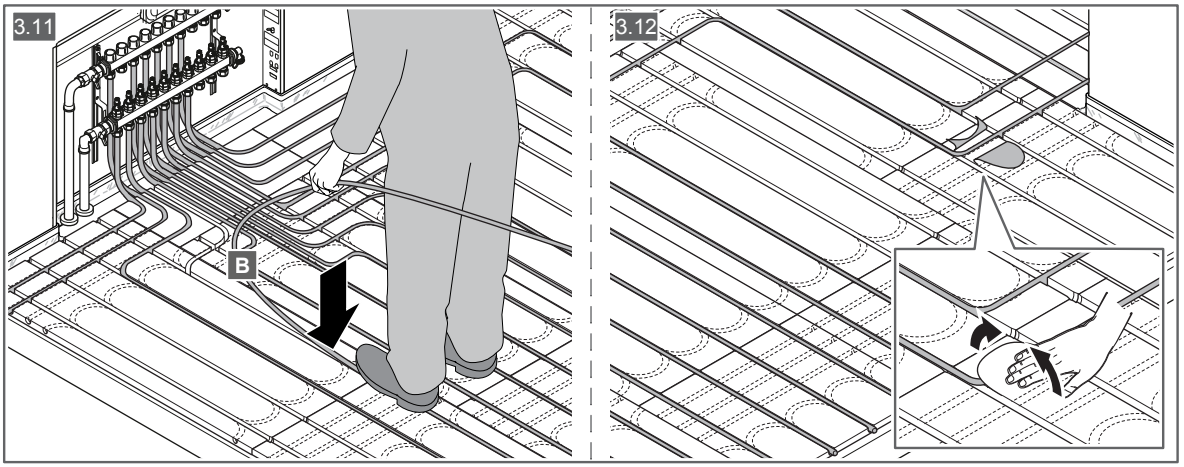

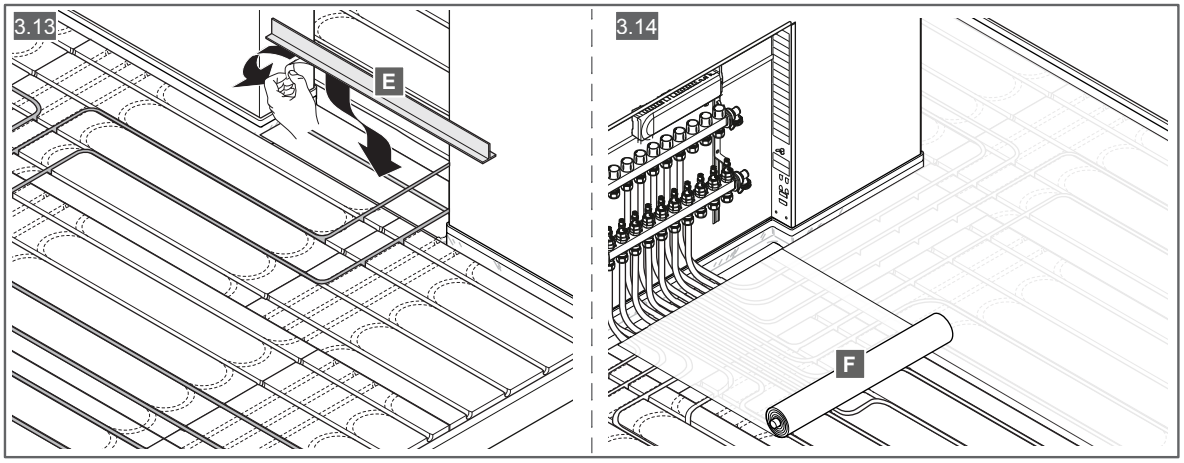

SI0000844

3

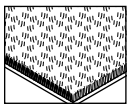

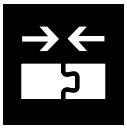

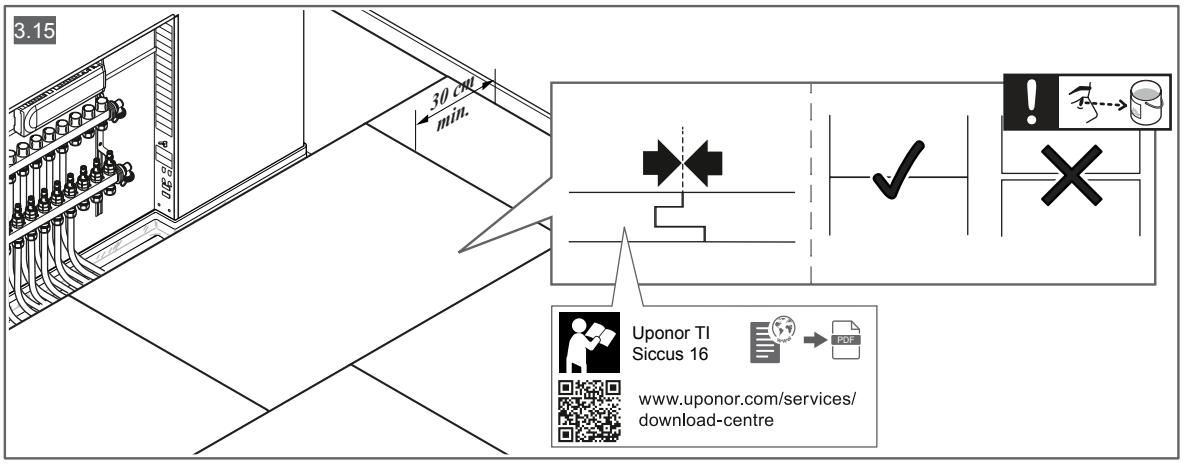
3.15
30 cm
min.
Uponor TI
Siccus 16
PDF
www.uponor.com/services/
download-centre

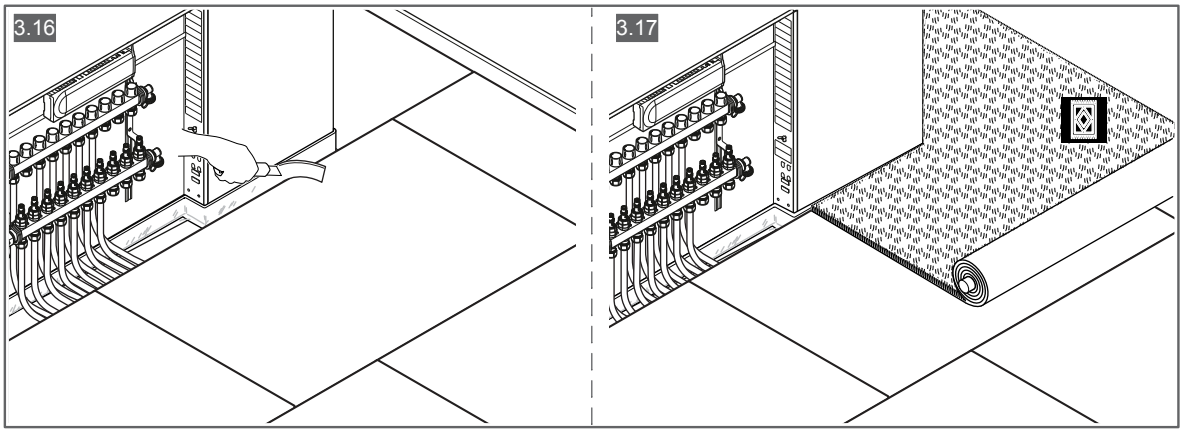
3.16
3.17

SI0000845

Uponor GmbH

Industriestraße 56,
D-97437 Hassfurt, Germany

1145905 v1_12_2024_INT
Production: Uponor / SKA

Uponor reserves the right to make changes, without prior notification, to the specification of incorporated components in line with its policy of continuous improvement and development.

www.uponor.com